JOURNAL

27 JUN 1958

OF THE

ELECTRICITY DEPARTMENT

GOVERNMENT OF MADRAS

Vol. X JULY—SEPTEMBER 1955 No. 2

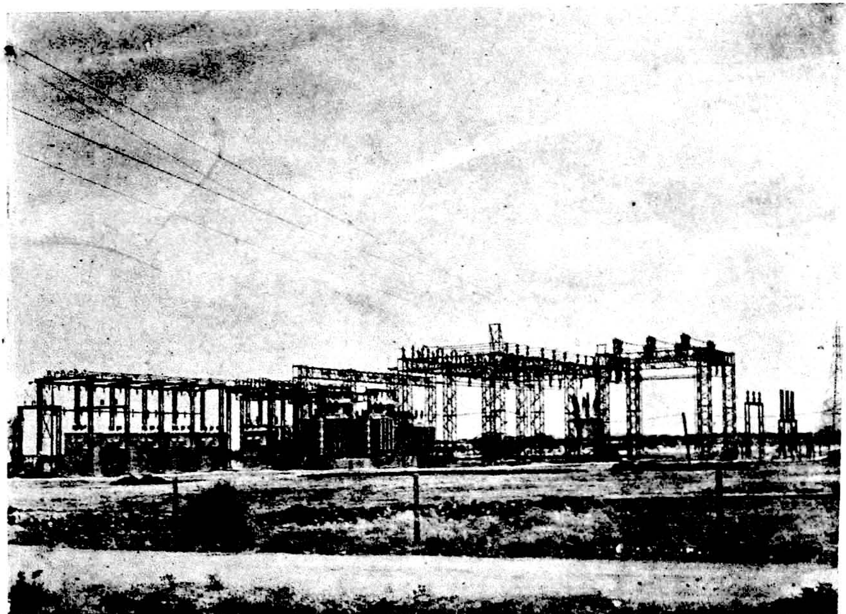

Thalayuthu Sub-Station

Price 8 annas

JOURNAL

OF THE ELECTRICITY DEPARTMENT GOVERNMENT OF MADRAS

27 JUN 1956

VOL. X JULY—SEPTEMBER 1956 No. 2

EDITOR

K. M. KURUVILLA . . . . *Chief Electrical Inspector to Government.*

MEMBERS OF THE ADVISORY COMMITTEE

N. R. NARASIMHAMURTHI, B.SC., B.E. . . . *Chief Operation Engineer (North).*

M. B. KANDASWAMI, B.A., B.E., M.E. (Hons.), M.I.E. (Ind.),
Chief Operation Engineer (South).

A. R. NARAYANA RAO, B.E. (MECH.), M.I.E.E., M.I.E. (Ind.),
Superintending Engineer (Distribution), Madras Electricity System.

P. V. A. NARAYANAMURTHY, B.SC.,
Superintending Engineer (Generation), Madras Electricity System.

P. A. KRISHNAN, B.A., B.SC. (Eng.), *Superintending Engineer, Technical (Electrical)*

The Department is not responsible for any statement made or opinion expressed in this Journal.

CONTENTS

PAGE

CARRIER CURRENT COMMUNICATION IN THE MADRAS GRID . . 55
Sri S. KRISHNASWAMI, B.Sc., C.I.I.Sc.

CURRENT TRANSFORMER TESTING AT ELECTRICAL STANDARDS LABORATORY 76
Sri S. RAMAN. B.E., (Hons.)

PROGRESS DURING THE QUARTER ENDING 31st MARCH 1955. 85

PAGE

TECHNICAL PRESS—

Rainfall of Madras State with Special Reference to Tamilnad and Rayalaseema. 90

Transformers with Class "H" Insulation. 94

Revised Bulk Supply Tariff of the British Electricity Authority 95

Electrical Hazard 95

SOCIAL AND PERSONAL 98

NOTES FOR THE GUIDANCE OF AUTHORS OF ARTICLES CONTRIBUTED FOR THE JOURNAL

Articles or papers should be authoritative and when describing works, the information should be accurate. Normally, articles or papers, already published in other journals are not accepted. In any case, the fact of the articles or any part thereof having been published previously must be indicated clearly in the forwarding letter. All manuscripts should be typewritten (double spacing) on one side of the paper only, with a margin of at least two inches. Manuscripts must bear the signature of the author (or the signatures of the authors). The title of the paper should not be long. If necessary, use a main title and a sub-title. No abbreviation should be used except those of a universal character. Numbers given to equations and formulæ in an article or paper should be assigned in order of occurrence in the paper. Symbols should be in accordance with the standard notations, unless there is specific reason for the contrary. The meaning of each symbol should be explained where first used and in case many symbols are used, a list should be provided in addition, in the beginning. Detailed references should be given to quotations. If numerous, these can be collected at the end, otherwise these should be placed as footnotes. References should be indicated by numbers, e.g., (4), (5), etc. Explanations given in footnotes should be indicated by signs, e.g., *, †, and not by numbers.

The authors of papers and articles are requested to scrutinize carefully the typed or cyclostyled copies before forwarding them. Equations and formulæ are best inserted in hand. Two sets of drawings should accompany an article. One set should be mere line-work without any lettering and the other complete with lettering, the former preferably on tracing cloth. Colour wash or line and pencil shades cannot be reproduced in line blocks. They should be replaced by hatching and colour lines by dashed chain or thicker black lines. The size of drawings or line blocks should generally be double the size to be reproduced in print.

It is desirable that the use of the first person should be avoided. When a specific statement is to be made, it should be written : "The author submits . . . . ", "The author holds the opinion . . . . . ", etc. It is desirable that articles or papers should be sectionalized by giving suitable 'sectional headings'. Avoid long and involved sentences; short sentences are more effective and less likely to be misinterpreted. Do not begin a new sentence with a numeral, write the number in full as word. Place zero before the decimal point when the figure represents something less than unity; thus :—0·75. Place a comma to mark the thousands in number of four figures and more; thus : 2,127,356 and, in the case of Rs. thus : 27,26,127. Do not write in the text of the article 8′ 6″ by 4′ 3″ but as 8 feet 6 inches by 4 feet 3 inches or as 8·5 feet by 4·25 feet. For numbers under 10—write out in full, if not followed by an abbreviation; thus, write nine days, but 9 lb., not nine lb. For numbers over ten use numerals ; thus 50 days.

MADRAS : PRINTED BY THE SUPERINTENDENT, GOVERNMENT PRESS

27 JUN 1958

Carrier Current Communication in the Madras Grid †

By S. KRISHNASWAMI, B.Sc., C.I.I.Sc.,
Executive Engineer (Electrical).

Introduction.—In the first article appearing in April–June 1955 issue the fundamental principles of carrier communication on power lines were dealt with. In this article the characteristics of the high voltage system at power line carrier frequencies and the method of transferring the carrier energy to and from the high voltage line are discussed. Finally, the salient features of the Brown Boveri carrier equipment on order for the Madras Grid are described briefly.

2. *Difference between power and carrier transmission.*—Primarily, in carrier transmission the power involved is of the order of a few watts or milliwatts instead of megawatts or kilowatts and the transmission efficiencies are of the order of one per cent down to 0·01 per cent or even less instead of near about 100 per cent obtainable in power transmission.

Any power line can be used for carrier transmission.. But the main difference between electric power transmission and carrier transmission arises on account of the frequency, which alters the behaviour of the power line as detailed below:—

(1) The velocity of propagation of an electric wave on a transmission line is very nearly equal to the velocity of light which is 186,000 miles per second. Hence any transmission line is electrically short for a 50 cycle power current as its wave length is about 3,700 miles while the same circuit is electrically, long for a carrier current, as the wave length of a 100 Kc/S carrier wave is only 1·86 miles. Therefore, the carrier wave moving along the line suffers attenuation or loss of amplitude and the solution of the problem is not so simple as in the case of power transmission.

(2) Another significant difference between power and carrier transmission is the relative efficiencies of transmission. The losses in any transmission circuit are made up of series resistance and shunt leakage losses. On modern transmission lines, leakage losses are small and efficient power transmission can be had by raising the voltage and decreasing the current. Since most of the lines are electrically short at power frequencies, the impedance of the line itself is negligible and the impedance is determined primarily by that of the terminal equipment and load.

In carrier transmission however, the lines are electrically so long that most of the power is absorbed in the line itself and efficiencies of the order of one per cent down to 0·01 per cent

† Second article on the subject by the author.

or even less are common. Thus, the receiving equipment has little effect on the transmitting end impedance. However with carrier transmission we are not so much concerned with transmission efficiency as with providing a voltage to energise a sensitive carrier receiver which can operate on an input of one milliwatt or even less. Actually it is this feature that enables several hundred miles of carrier transmission in spite of the transmission efficiency being so low.

(3) The high frequency waves impressed on the lines between phase wires or between one or more wires and ground will proceed along the line as determined by the line characteristics and do not necessarily continue indefinitely as strict phase to phase or phase to ground waves. The carrier signal will jump over from one conductor to the other by the inductive or capacitive coupling. This characteristic is of great importance in the carrier transmission as the signal will travel in spite of break or discontinuity in the transmission line conductor.

(4) The high voltage line besides causing attenuation, which reduces the signal strength of the transmitted carrier, contributes noise at radio frequencies. In every power line carrier system, there is a minimum signal to noise ratio at the receiving point which will give satisfactory service. It is therefore essential to keep down the attenuation in the carrier path and also ensure the minimum signal to noise ratio, that will enable satisfactory operation of the carrier system.

3. *Measure of attenuation.*—Before proceeding to evaluate the attenuation and noise level in a transmission line and examining the ways and means of keeping them down, it is necessary to know the unit of measurement of these losses.

In carrier transmission it is convenient to consider the transmission characteristic of a system in terms of attenuation or the decrease of power along the transmission line. The ratio between the values of voltage, current or power at any two points is a measure of the attenuation of the circuit between these two points. At carrier frequencies the power along the transmission line diminishes according to an exponential function.

Consequently the attenuation is expressed in terms of decibel—a convenient unit borrowed from the communication field which is merely, the logarithm of the ratio of two values of power, voltage or current. Since the overall efficiency of two or more circuit components in series is the product of the efficiencies expressed in per unit values, the total circuit loss in decibels can be determined by adding the decibel losses of all components.

If the logarithm of the ratio of powers is taken to the base 10 the unit is the 'bel' or 10 'decibel' which is commonly used all over the world. If the logarithm is taken to the base 'e' as in Naperian logarithms it is called a 'Neper' which is commonly used in Europe. The relationship between 'decibel' and 'Neper' is worked out below :—

The bel and the Neper.—Two powers P_1 and P_2 aresaid to differ by X bels, when

$$\frac{P_1}{P_2} = {}_{10}{}^{x} \text{ i.e., } x = \log_{10}\left[\frac{P_1}{P_2}\right] \text{ bels.}$$

If in decibels:

$$\frac{P_1}{P_2} = 10^{0.1x} \text{ i.e., } x = 10 \log_{10}\left[\frac{P_1}{P_2}\right] \text{ decibels.}$$

For one decibel the power ratio is $10^{0.1}$ or 1·259.

Two powers P_1 and P_2 are said to differ by Y neper.

When $\frac{P_1}{P_2} = e^{2} Y$ *Or* $Y = \frac{1}{2} \log_e \frac{P_1}{P_2}$ nepers.

If a transmitter power is 10 watts, it can overcome an attenuation of $10 \log_{10}\left[\frac{10}{\cdot 001}\right] = 40$ db. the reference power being taken as one milli watt.

The transmitter power when expressed in

$$\text{Nepers} = 1/2 \log_{e.} \frac{10}{\cdot 001}$$

$$= 2\cdot 302 \times \tfrac{1}{2} \log_{10}\left[\frac{10}{\cdot 001}\right]$$

$$= \frac{4}{2} \times 2\cdot 302 = 4\cdot 604 \text{ Nepers.}$$

Or 1 Neper = 8·686 db.

Power, voltage and current ratios and their corresponding values in Decibles. are given in the table I below:—

TABLE I.

Power ratio. (1)	*Voltage or current ratio.* (2)	*Decibels.* (3)	*Percent efficiency.* (4)
1·26	1·12	1·0	79·5
1·58	1·26	2·0	63·4
2·0	1·41	3·0	50·0
3·16	1·78	5·0	31·6
10·0	3·16	10·0	10·0
100·0	10·0	20·0	1·0
1,000·0	31·6	30·0	0·1
10,000·0	100·0	40·0	0·01

It may be noted that by doubling the transmitter capacity the gain in the signal strength is not doubled but increased by only 3 db.

4. *Attenuation.*—The total attenuation of a power line carrier consists of resistance or series losses and radiation or shunt losses in transmission line itself, losses due to the power straying from the desired path, losses due to reflection and losses due to coupling equipment and by-passes. The total loss over a channel is the sum of these losses expressed in decibels.

5. *Line attenuation.*—The line attenuation depends upon many factors like frequency, conductor size and spacing, line configuration, presence of ground wires or parallel circuits, transpositions, ground resistivity and other factors.

At high frequencies the resistance of the conductor is greater than the D.C. resistance due to skin effect. The skin effect becomes pronounced as the frequency increases, as the resistance increases as the square root of the frequency. The resistance attenuation B_r of a line in Nepers is given by the formula $B_r = \frac{1}{2} \times \frac{r}{Z_c}$ where γ is the resistance per mile and Z_c is the characteristic impedance of the line which is equal to $\sqrt{L/C}$, 'L' being the inductance and C the capacitance of the line per mile. The characteristic impedance is proportional to D/d where D is the distance between conductors and d is the diameter of the conductor. The higher the operating voltage of the line the greater is the characteristic impedance and lesser is the resistance. Therefore the resistance attenuation decreases with the increase in operating voltage.

Normally the insulation of the power line is quite good and the leakage attenuation is negligible in dry weather. Higher voltage lines usually have lower losses due to longer insulation strings, which reduce carrier leakage. In wet weather the leakage attenuation is considerably increased. The leakage attenuation (B_g) is given by the formula $Bg = \frac{1}{2}\ g \times Z$ where g is the conductance per unit length of line which increases with the frequency. In hoar frost and sleet the attenuation may go up by 3 to 5 times the normal value.

The high frequency waves impressed on a conductor do not necessarily keep on to the same conductor. Depending upon the inductive and capacitive coupling with other conductors in the neighbourhood the transmission changes en route and there is loss due to such straying as the carrier energy appearing in the uncoupled conductors may get dissipated in the station equipment.

Calculation of line attenuation, to be dependable should take into consideration all the above factors and in practice measured data on similar lines or empirical formula based on measured data is generally preferred.

As the voltage of the line increases, resistance and leakage attenuation decreases. But as the carrier frequency increases, losses also go up due to increased radiation,

increased conductor resistance and dielectric losses. The values for phase to ground coupling are about 1·25 times the phase to phase values. Table II below gives typical attenuation data for transmission lines.

TABLE II.

Transmission line attenuation.

Line volage K.V. (1)	*Approximate attenuation, in Db. per mile.* *Phase to phase coupling.* (2) 20 kc.	(3) 50 kc.	(4) 100 kc.	(5) 150 kc.	(6) 300 kc.
230	0·03	0·05	0·075	0·107	0·2
138	0·041	0·065	0·09	0·12	0·215
115	0·05	0·075	0·102	0·135	0·27
69	0·055	0·08	0·11	0·145	0·29
34·5	0·073	0·10	0·13	0·18	0·38
13·8	0·12	0·15	0·18	0·215	0·45

Line voltage K.V.—cont.	*Approximate attenuation, in Db. per mile*—cont. *Phase to ground.* (7) 20 kc.	(8) 50 kc.	(9) 100 kc·	(10) 150 kc.	(11) 300 kc.
230	0·04	0·062	0·094	0·13	0·25
138	0·051	0·081	0·113	0·15	0·27
115	0·062	0·094	0·130	0·16	0·34
69	0·069	0·100	0·137	0·18	0·36
34·5	0·094	0·125	0·16	0·22	0·47
13·8	0·15	0·19	0·22	0·27	0·56

In a single circuit line without continuous ground wire, phase to phase coupling results in lower loss than phase to ground coupling. When there is continuous ground wire, there is much less difference between the two methods of coupling.

6. *Line reflections.*—When the high frequency wave travels along the line, a portion of the incident wave is reflected back when there is an abrupt change in impedance. If there is an open circuit the reflected wave is of the same polarity, while in the case of a short circuit it is reversed in polarity.

In power lines, such reflections occur at the end of an open line, at the junction of two or more lines and to a minor extent at sub-stations. Transmission loop lines may cause partial cancellation of the carrier signal arriving over the two sides of

the loop. As these introduce excessive losses and wave distortion, which affect the telephone quality, such reflections have to be eliminated.

This is done by the judicious use of line traps or line terminals, change from full metallic to phase to ground coupling or change of carrier frequency. Sub-stations and transformer losses are usually negligible above 50 kc. Cable circuits or series reactors may produce extremely high losses and should receive special consideration.

The line trap is a tuned parallel resonant circuit placed at the termination of the line at the sub-station or on either side of an intermediate sub-station or on a branch line. The trap has a very high impedance at one or more desired frequencies and these frequencies are prevented from getting into the sub-station equipment or branch circuit. Thus the trap confines the carrier to the desired path. But even with the use of the line traps there will be slight attenuation on account of the losses in the bridging circuit and the loss in the uncoupled phases, where no line traps are provided.

7. *Losses in other parts of the carrier channel.*—The terminal coupling equipment and the connecting co-axial cable also introduce further losses. The loss in the coupling equipment may be taken as one Db. By the use of higher capacitance capacitor this value can be reduced if necessary. The attenuation in the co-axial cable varies with the frequency as shown in table below.

Frequency in K.C.	*Loss Db. per 1,000 feet.*
20	0·2
50	0·32
100	0·5
150	0·6
300	0·9

8. *Carrier frequency noise.*—As already stated, apart from the fact that the strength of the carrier signal diminishes along the line, the signal is also subject to interference by noise caused by disturbances on power line and other causes. Noise generally falls into two categories viz., random noise which has a continuous frequency spectrum and impulse noise which consists of sharp well separated impulses.

Random noise is caused by thermal agitation in the valves, resistors and conductors, and produces a steady hissing or rushing sound. The Impulse noise is caused by voltage waves produced by sudden changes of load or switching operation, or originates in atmospherical discharge or corona discharge.

The most important noise in a carrier system is that which originates in the power system itself. The atmospheric noise is negligible except that caused by nearby lightning strokes. The normal noise in the transmission system is that arising from innumerable small arcs in dirty or defective insulators, poor joints and the like. In wet weather when there is corona discharge in addition, the noise increases to several times its normal value.

A 220 K.V. line has thus a considerably higher noise level than a line with lower voltage. A new line has also more disturbance due to

corona on account of the uneven surface of the conductor than a line in use.

As the noise frequencies are spread over the whole frequency range they cannot be prevented from entering the carrier frequency receivers, where they will be amplified along with the signal. But the noise interference could however be reduced by keeping the band width of the transmitted signal narrow.

9. *Signal to noise ratio.*—The object in carrier transmission should therefore be not only to keep the over-all attenuation as low as possible, but also to keep the level of the transmitted signal considerably higher than the noise level. Thus the signal to noise ratio must be maintained as high as possible.

For good reception the minimum received signal strengths required to overcome normal noise effects are roughly as follows :—

(1) Telemetering ..	15 db.
(2) Relaying	20 db.
(3) Voice communication.	15 db.
Good reception ..	20 db.
Excellent reception.	30 db.

Fig. 1 shows a typical level diagram of carrier frequency communication. Just as the level of the signal

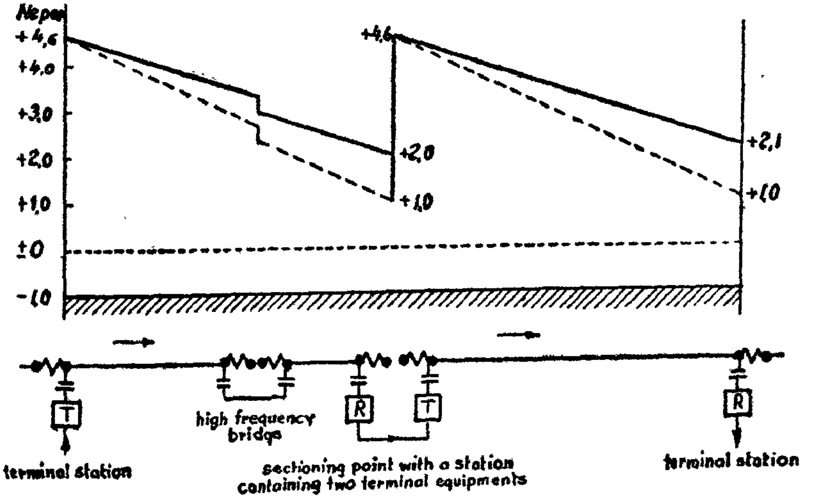

Fig. 1. Level diagram of a carrier frequency communication.
1 Neper = 8·686 db

T transmitter
R receiver

—— dry weather
- - - wet weather
//// noise level

is expressed in neper or decibel so also the noise level is expressed in the same terms, the zero level being one milli watt. Thus the positive or negative level indicates that the power is greater or smaller than the zero level power. The noise level in this case for wet weather is assumed to be one neper.

From the transmitter end of the line the level diminishes on account of the attenuation of the line with greater or less inclination according to the weather. As the signal strength will have to be at least 15 db or say nearly 2 neper higher than the noise level, reception is possible at this intermediate point where a difference of 2 neper is obtainable under all weather conditions. However for the next section intermediate repeater is necessary to augment the signal strength to its original level to take care of the attenuation in that section.

10. *Best utilisation of the line characteristics.*—With the knowledge of the transmission level, modulation degree, line attenuation and noise level the maximum range of communication may be calculated. As the attenuation increases with the frequency and decreases with the operating voltage the higher range of frequencies 150 to 300 Kc can be used for very high voltages of 110 KV and above, and the lower range of frequencies from 50 to 150 Kc can be used for 66 KV and below. In cases, where the length of the line is great, the overall attenuation can be brought down by adopting lower frequencies, higher capacitance capacitors and low attenuation coaxial cables. If there are a number of intermediate stations and tap-offs as well, a repeater station has to be introduced at a suitable point.

The range of 220 KV line without repeater is generally about 200 to 250 miles and the same range can be obtained on lower voltage lines as the lower noise level is counter-balanced by the greater attenuation of the line. Tests have proved that with phase to earth coupling the range for a 66 or 110 KV line is about 100 miles.

11. *Method of coupling.*—In early days of power line carrier, it was common practice to couple the carrier equipment to the power line by antenna coupling. In this method, the carrier equipment was connected to an isolated conductor several spans long, run on the same tower with the circuit to which coupling was to be effected. Subsequently it was realised that the energy which found its way into the power line was transferred mainly through the capacitance, between the antenna and the line and this led to the development of compact capacitor units for coupling purposes. Such coupling capacitors are safer, easier to instal and are a more efficient coupling means than antennas. They also have the advantage that they can be used simultaneously in conjunction with potential devices to supply a voltage proportional to the line voltage for the operation of protective relays and indicating instruments. The capacitor offers a high impedance path to normal power frequency (50 cycles) currents.

$$Z = \frac{1}{2 \pi fc}$$

and a low impedance path to high frequency currents.

The general methods of coupling adopted in power line carrier are illustrated in Fig. 2 and they are—

1. Line to ground coupling.
2. Line to line coupling.

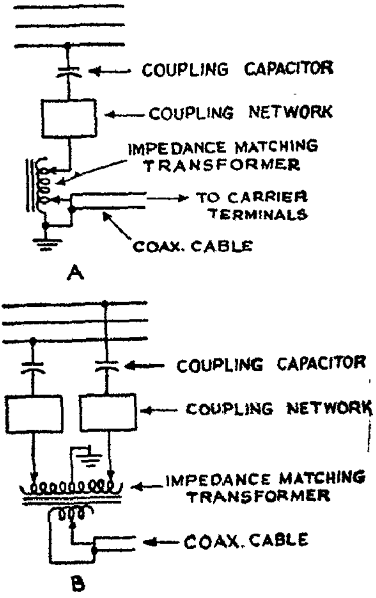

FIG. 2.—METHOD OF LINE COUPLING.

A. LINE-TO-GROUND.

B. LINE-TO-LINE.

2A

Fig. 3 illustrates the resonant line coupling with single and two frequencies.

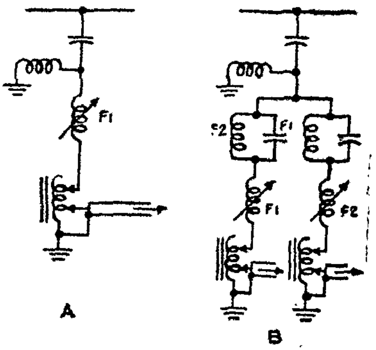

FIG. 3.—RESONANT LINE COUPLING.

A. SINGLE-FREQUENCY.

B. TWO-FREQUENCY.

Phase to ground coupling is the most common and economical one and is preferred to phase to phase coupling though the latter has 20 per cent less line attenuation and 40 per cent less coupling attenuation and is less susceptible to noise.

It is seen that in the case of single phase to ground coupling also, the continuity of the communication is maintained even if all the three phases are shorted and earthed (under conditions of line repair) because of electromagnetic and resistance coupling of the sections on either side of the point where the line is earthed. Due to such earthing the attenuation of the line is increased and signal becomes weak. If the transmitter has sufficient reserve power, it will be able to

overcome this additional attenuation and the receiver must also be sensitive. Similarly if discontinuity is created on the line by the opening of line switches, communication will not be interrupted because the electrostatic coupling at such points is adequate for the transfer of carrier energy from one side of the discontinuity to the other side. It is for this reason no bridging circuits are provided for mere switching towers. However if the discontinuity of the line or the shorting and earthing of all the 3 phases of the line occurs within 10 per cent of the length of the section from the terminal stations then communication will be interrupted.

12. *Line matching.*—It is well known that in a D.C. circuit consisting of a battery and an external resistance in series, the maximum power is deliverd to the external load when the external resistance is equal to the internal resistance of the battery. In an A.C. circuit also if the e.m.f. of the generator is E, the internal impedance Z_s and external impedance Z_r the power delivered will be

$$P = \left[\frac{E}{Z_s + Z_r}\right]^2 \times Z_r$$

$$= \frac{E^2 \times Z_r}{\left[Z_s + Z_r\right]^2}$$

Maximum power occurs when $Z_s = Z_r$.

Since the line impedance varies and it will be difficult to match the impedance of the transmitter and line by direct design, correction of impedance is made by coupling through a transformer.

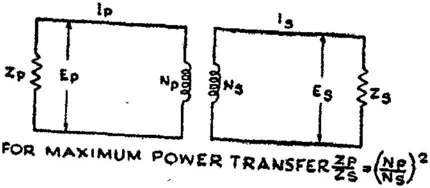

FIG. 4.—MATCHING THE IMPEDANCE OF TWO CIRCUITS.

In the circuit in Fig. 4 the power output into the primary is equal to the power output from the secondary:

$$\frac{E_p^2}{Z_p} = \frac{E_s^2}{Z_s}$$

Substituting the turns ratio for the voltage:

$$\frac{N_p^2}{N_s^2} = \frac{Z_p}{Z_s}$$

If a line of 600 ohms impedance should be coupled to a transmitter of 67 ohms impedance, the matching transformer turn ratio will be

$$\sqrt{\frac{600}{67}} = 3:1$$

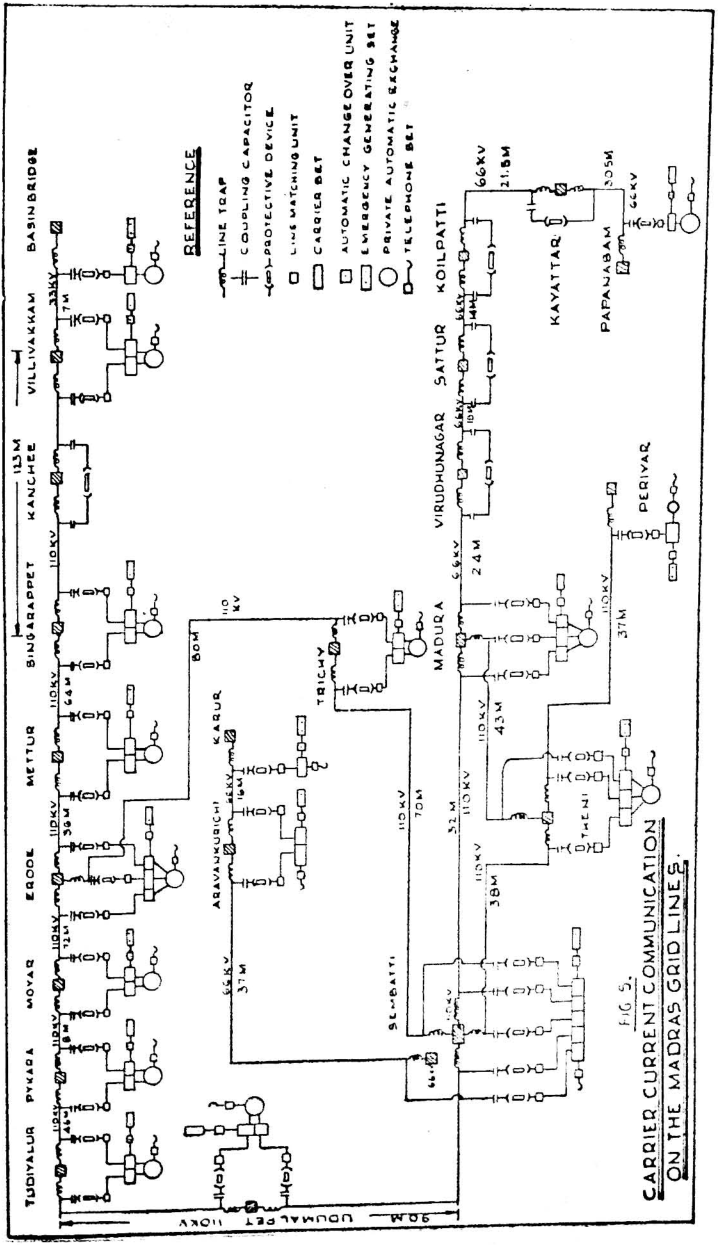

FIG. 5.
CARRIER CURRENT COMMUNICATION
ON THE MADRAS GRID LINES.

13. *Characteristic impedance of transmission lines.*—The characteristic impedance of a transmission line Z_c at carrier frequencies is independent of the length of the line and can be expressed as

$Z_c = \sqrt{L/C}$ where L is the induction and C the shunt capacitance per unit length. This reduces $Z_c = 276 \log_{10} (2D/d)$ for two wire circuit and $Z_c = 138 \log_{10} (4H/d)$ for a single conductor with ground return, where D is the spacing between conductors, d is the diameter of the wire, and H is the height of the conductor above ground.

It is interesting to note that the surge or characteristic impedance of all lines is constant within +6 per cent, the average value being 800 ohms, for line to line and 500 ohms for line to ground. In the case of power cables it is between 25 to 50 ohms. For the maximum transference of power from the transmitter to the line, it is this characteristic line impedance that will have to be matched with transmitter impedance.

14. *Salient features of the carrier equipment ordered for the grid.*—The Brown Boveri fixed frequency, double side band, amplitude modulation, carrier system, shown in Fig. 5 will provide duplex voice communication over the 110, 66 and 33 KV power lines at the following stations :—

Basin Bridge (Madras), Korattur, Singarappet, Mettur, Erode, Moyar, Pykara, Thudiyalur (Coimbatore), Udamalpet, Madura, Papanasam and Tiruchirappalli.

Sembatti, Theni, Aravankurichi and Karur have been included in the extension order. Bridging circuits are provided at Kanchee, Virudhunagar, Sattur, Koilpatti and Kayathar.

A typical layout of the carrier equipment in a Station is shown in Fig. 6.

15. *Coupling equipment.*—Phase to earth coupling has been adopted throughout. The additional line attenuation in the longer stretch, viz., Papanasam-Madura is proposed to be compensated by coupling capacitors of high capacitance value.

16. *Wave trap.*—The wave trap consists of a coil through which the 50 cycle power current flows and a tuning device which tunes the whole unit to the frequencies or frequency band to be trapped. The blocking impedance for these frequencies will be a multiple of the characteristic impedance of the line which will ensure trouble free operation of the carrier system when the H.T. line is grounded behind the trap or when the condition of the H.T. plant is altered.

The tuning element consists of a (mica) capacitor with a high temperature stability againstpeak voltages, which are caused by the voltage drop across the coil in the case of short circuit currents. The capacitor is protected by an arrester. The whole tuning element is accommodated in the interior of the coil and all parts made weather proof so that no special protective cover is required.

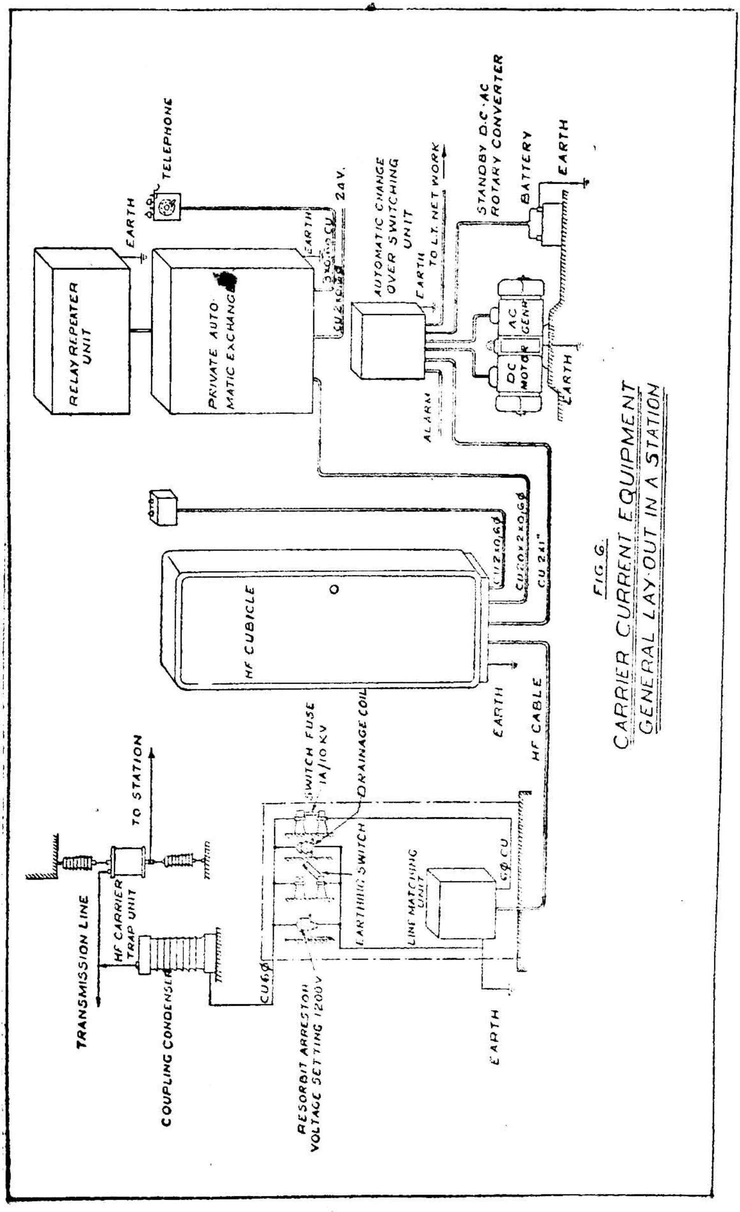

FIG. 6.
CARRIER CURRENT EQUIPMENT
GENERAL LAY-OUT IN A STATION

"All Wave" traps are used for all sections except Papanasam-Madura where two wave traps are used. The 110 KV traps are rated for 400 amps while the 66 and 33 KV traps are for 250 amps. They will be mounted on the top of the coupling capacitors or suspended from the line according to site conditions.

17. *Coupling capacitor.*—The coupling capacitors for 110, 66 and 33 KV have capacitance values of ·0065, ·00635 and ·01180 micro farad respectively. The higher capacity capacitor that will be used in Papanasam-Madura 66 KV section will have a capacity of 0·0115 micro farad.

The capacitors consist of several paper drums connected in series and are centred within hollow ceramic cylinder. The interior of the cylinder is filled with nepolin oil to increase the insulation level as also to protect the paper drum from moisture and other damaging influences. The capacitor has the appropriate impulse strength and flashover values required for that voltage.

18. *Protective device and line matching unit.*—The protective device is for protecting the carrier equipment and the personnel in case of short circuit or flash-over occurring on the coupling capacitors.

This consists of a drainage coil, lightning arrester and grounding switch. The drainage coil serves to drain the 50 cycle capacitive currents and at the same time prevents the flow of high frequency currents. The lightning arrester is to lead any high voltage impulses on account of transient phenomenon to earth. The grounding switch is to ground the coupling equipment and no work should be done in any part of the equipment without closing this switch.

The line matching unit, consists of an impedence transformer to match the impedance of the coaxial cable with a characteristic impedance of 125 ohms to that of the high voltage line which has a characteristic impedance of 600 ohms. The primary and secondary windings of the transformer are insulated from each other to withstand 10 KV. Tuning capacitors are inserted in both primary and secondary winding so that the two circuits function as tuned circuits and thus the attenuation is kept down to the minimum as shown in Fig. 7.

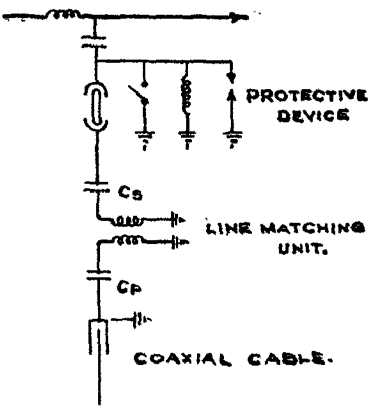

FIG. 7.—PROTECTIVE DEVICE AND LINE MATCHING UNIT.

19. *Bridging Circuit.*—At Kanchee, Virudhunagar, Sattur, Koilpatti and Kayathar where carrier sets are not installed a Bridging circuit is provided to interconnect the coupling capacitors at the Station terminals of the line to by-pass the station equipment. The same line conductor is used for this inter-connection and this makes the arrangement considerably cheaper as the line matching units and coaxial cables are avoided.

20. *Carrier transmitter set.*—The carrier set for the duplex voice communication, for fixed frequency system with amplitude modulation and double side band transmission, consists of a steel cabinet with door and lock and one hinged rack as shown in Fig. 8. This contains merely the carrier equipment detailed below, whereas all other auxiliary equipments like automatic exchange, automatic changeover switch for emergency power supply and tele-metering transmitters and other facilities (if installed) are mounted in separate cabinets.

The swing panel consists of a number of detachable racks one for each of the following :—

(1) H.F. transmitter band filter with an instrument for checking the site condition and transmitter power.

(2) The H.F. Transmitter and modulator.

(3) H.F. receiver band filter.

(4) H.F. receiver with automatic volume control.

(5) Fork connection.

(6) Power supply unit.

(7) Testing unit for easy checking of the tubes during operation and for measuring the power output complete with one set of working tubes and fuses.

(8) Four wire group selector.

(9) High pass filter 200 C.S.

The various units transmitter, receiver, filters, power packs, etc., are mounted on recess chassis. The tubes, transformers, coil assemblies and other bulky items are located on the rear of the chassis.

All frequency dependent parts of the various units are mounted on separate chassis plates.

21. *Transmitter.*—The H.F. Transmitter is suitable for being permanently tuned for the band width of 8 Kc. in the range 48 to 320 Kc., and the frequency alteration involves merely a replacement of the separately mounted chassis plates carrying frequency dependent parts.

The transmitter power is 10 watts (40 db) carrier output on 125 ohms (40 watts peak output with 100 per cent modulation) adjustable in 3 steps as follows :—

Step 1	8·8 V	70 mA	0·6 W
Step 2	17·7 V	140 mA	2·5 W
Step 3	34·0 V	285 mA	10·0 W

The frequency stalbility is ± 100 C.S. within a temperature variation of $\pm 20°$C. This higher figure is because a variable valve oscillator controlled by inductance and capacitance is used instead of a crystal oscillator. This has the advantage of simplicity in adjustment of frequency and no special oscillator is required for each frequency as in the case of the crystal oscillator.

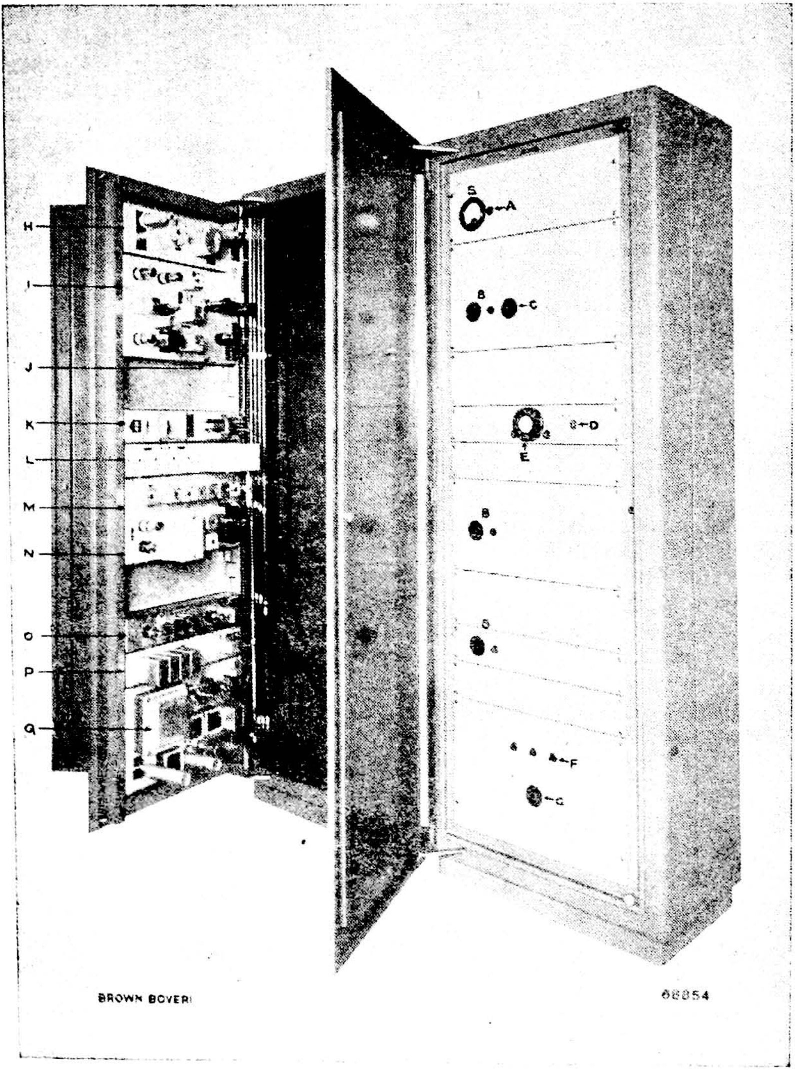

FIG. 8.

Power Line Carrier Current Communication.

Double Side-band Fixed Frequency Carrier Sets.—
On the right: front door open;
On the left: hinged frame with unit chassis open.

Reference.	Details.
S	— Instrument for checking the tube-condition and transmitter power.
A	— Push-button for HF output power.
B	— Selector switch with push-button for testing tube condition.
C	— Regulation of the transmitter power.
D	— Additional telephone station.
E	— Dialling disc for the telephone station in the HF panel.
F	— Push-buttons for the supply voltages.
G	— Power switch.
H	— HF—Transmitter band filter.
I	— Modulator and oscillator stage.
J	— HF transmitter.
K	— Fork connection.
L	— Filter for superimposed channels.
M	— HF receiver band filter.
N	— HF receiver.
O	— Impulse amplifier for remove calling.
P	— Chassis for 4-wire through connection and hand calling set.
Q	— Power pack.

The low frequency input voltage for 80 per cent modulation is

Speech 0·5 V on 10 KΩ
Calling 1·0 V on 10 KΩ
Superimposed signals such as telemetring 3·0 V on 10 KΩ

22. (a) *Receiver.*—The receiver sensitivity for a minimum input signal level is 2 mV. The total selectivity of the receiver band filter in 8 Kc. spacing from the carrier is 85 db.

The automatic volume control provides for increase of H.F. voltage from 2 mV to 1000 mV or 1 : 500 and A.F voltage 1 : 2 and has a range of 52 db.

The low frequency output is for

(1) Speech maximum 6 V on 600Ω

(2) Superimposed signals maximum 10V on 600Ω

(b) *Total channel.*—The band width for operation can be set at 2×2,500 C.S. if it is for speech or for 2×4,000 C.S. if it is for combined purposes.

The signal to noise ratio is larger than 5 N (43 db) under normal operating conditions. The maximum surmountable line damping is 6 N (52 db) with additional reserve for unfavourable transmission condition brought about by earth fault, short circuit, bad weather, etc.

23. *Power supply.*—The carrier set requires 230V.A.C. 50 cycle supply and will consume 250 VA. In case the A.C. supply fails there is automatic switching arrangements to change over the supply to the station battery and a motor generator set is used for converting the D.C. to A.C.

24. *Automatic telephone equipment.*—The automatic equipment except for the telephone instruments with the priority key is being supplied by the Indian Telephone Industries, manufactured to the requirements of the Brown Boveri Trunk line dialling system. The exchange board consists of connecting sets and subscribers bank. The connecting set comprises call finders and line selectors. Each connecting set is allotted a separate relay bracket each bank containing 18 relays, two for each subscriber. The details of the exchange board at the various stations are as follows:—

Name of station.	Type of exchange board.					
	Subscribers lines.		Connecting sets.		Carrier outlets.	
(1)	(2)	(3)	(4)	(5)	(6)	(7)
	INSTALLED.	MAXIMUM.	INSTALLED.	MAXIMUM.	INSTALLED.	MAXIMUM.
1. Basin Bridge	12	27	3	4	1	8
2. Tudialur	12	27	3	4	2	8
3. Madura	12	27	4	4	3	8
4. Erode	6	6	3	3	2	4
5. Mettur, Pykara, Singarappet, Udamalpet, Korattur, Moyar and Tiruchi.	6	6	3	3	2	4
6. Papanasam	6	6	3	3	1	4

The Brown Boveri Trunk line call system provides fully automatic dialling between stations and also between the trunk line call system and the local automatic exchanges in each power or sub-station. The trunk line number always comprises two digits and the trunk call system can be extended to comprise a total number of 94 stations.

The trunk call system is based on the so-called four-wire group selector. This unit connects the carrier sets to the local telephone exchanges (terminal connection) or interconnects the carrier sets directly on a four-wire basis (transit connection). One four-wire group selector is provided for each carrier set. The internal traffic on the local PAX is not affected or disturbed by transit trunk conversations.

When a subscriber wishes to set up a trunk connection, he first dials the so-called directional number. This is the number of the subscriber's line to which the four-wire group selector of the desired direction is connected. After this directional number has been dialled, the local group selector as well as the remote selector in the opposite station will be engaged for the call. The directional number is followed by the so-called trunk call number which remains the same for each station irrespective of the point in the network from which the call originates. The trunk line number is evaluated and transferred through all the four-wire group selectors of the intermediate stations until it reaches the station corresponding to the number dialled. The caller is then connected to the internal exchange of the station required, he receives dial tone from that exchange and can immediately dial the internal number required.

The advantage of the separation between the trunk line call system and the local telephone exchanges is that the trunk line system can comprise up to 94 stations and that the number of subscribers and carrier sets in each station is practically unlimited. It is of further advantage that the dialling procedure for each subscriber of the system is absolutely constant.

The local exchanges and the trunk line dialling system are provided with priority call facility. If a calling subscriber authorized for priority receives engaged tone at any point in his dialling process, he can connect himself across the engaged line by pressing his priority button. The engaged tone may originate in the connecting set of his own exchange or in any line section of the route, which may have been previously engaged by a conversation. Whatever the source of the engaged signal which he hears, the caller can interrupt the existing connection and request the speaking subscribers to replace their hand sets. On this being done, the call required by the priority subscriber will be automatically put through without any re-diallings. Two speaking subscribers are always warned by a special signal in their ear pieces when a third party claims priority on their line.

The signalling characteristics of the automatic system are as follows :—

Engaging : 250/100/100 milliseconds,

Priority : 250/100/100 milliseconds.

Release : 600 milliseconds.

These characteristics are such that radio noises on the power line will not engage or otherwise block the automatic system.

The four-wire group selectors are provided with pulse repeaters which correct both the incoming and outgoing pulses so that they maintain the correct pulse ratio. Incorrectly adjusted dials of the local telephone stations do not cause incorrect trunk line dialling. Pulse distortions which may occur on the power line carrier links are also corrected by the pulse repeaters. Hence the possibility of the automatic system setting up connections other than those required is eliminated.

25. *Connection to the existing magneto telephone system.*—The existing magneto telephone connections at the stations where the carrier sets and the automatic telephone exchange are installed can be connected to the automatic system as detailed below so that the available facility in the automatic exchange is fully utilised.

If the loop resistance of the telephone cable or overhead telephone line does not exceed 750 ohms, the magneto telephone instrument can be replaced by an automatic telephone instrument with dial and in that way, the subscriber concerned can be connected directly to the automatic telephone exchange. Should the loop resistance exceed this figure or should the subscribers, lines be isolated by protection transformers as is the case with a high tension protective systems, then the magneto stations concerned should be left unchanged. The interconnection to the automatic telephone system can then be done by means of a two-way telephone unit as shown in Fig 9. *This unit is provided with two* loops. One loop is connected to a subscriber's line of the local automatic exchange. The second loop is connected to the magneto telephone system for which interconnection to the automatic system is required. The magneto telephone stations are able to call the two-way telephone station by turning the handles of their generators in the normal way. They can then ask the operator of the two-way telephone to connect them to any subscriber of the power line carrier system.

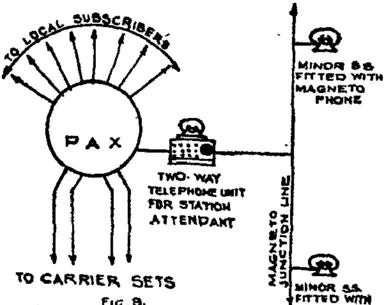

FIG. 9.
INTER-CONNECTION OF PAX AND MAGNETO JUNCTION LINE

After having received the call from the magneto station, the operator dials the automatic subscriber required. After having established the connection, he can interconnect the magneto station with the called party on the automatic system by means of the special press button. The operator

can at any time connect himself into the conversation and interrupt it, if necessary. The through connection in the reverse direction, i.e., from the automatic system into the magneto system, takes place in a similar way.

Certain unimportant subscribers on the private automatic exchange can be blocked from making trunk calls on the carrier system. They can, however, make internal calls on the PAX and also be connected through to the magneto system.

Where a magneto exchange carries a large number of subscribers as at Mettur, it is economical to retain it and make interconnection to the new PAX by means of an automatic line position fitted to it. This automatic line position is merely a dial connected as a subscriber on the PAX. By operating this dial, the operator of the magneto exchange can connect his automatic line position to the PAX and thus to the carrier system. By manual switching, he can then connect this line position to any one of the subscribers on his magneto board.

26. *Mobile carrier set.*—The mobile carrier set enables communication to be established between the repair gang on the line and the nearest carrier station. The set works on the same principles as the fixed station and has a power output of 2·5 watts. By stretching an antenna 250 yards long parallel to the power conductor as shown in figure 10 coupling of the H.F. system with the H.T. line is established. By the addition of a manual calling unit on the carrier sets of the terminal stations the mobile set can be called by the fixed stations provided the transmitter-receiver sets of the mobile unit is tuned to the appropriate frequencies.

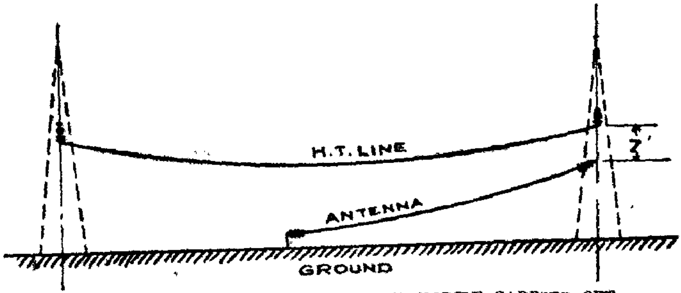

FIG. 10.—ANTENNA COUPLING FOR MOBILE CARRIER SET.

Power supply to the mobile set is from a petrol electric set. The whole equipment weighs 110 lb. and the makers are trying to cut down the weight to 70 lb.

27. *Conclusion.*—The basic principles of carrier current communication on power lines and the brief details of the equipment, that will be installed shortly, discussed in the two articles, will give an idea to our engineers the extent of improvement in the Departmental communication that can be expected in the near future.

27 JUN 1958

CURRENT TRANSFORMER TESTING AT ELECTRICAL STANDARDS LABORATORY

By S. RAMAN, B.E. (Hons.),
Assistant Engineer (Electrical).

Testing of current transformers is an important item of works done at the Electrical Standards Laboratory. A brief review of the testing arrangements is given in this article.

Range of tests.—Current transformers of all classes, from the highest accuracy, classes AL and BL, to the commercial accuracy, class C, are tested at the Laboratory. Testing is done for ratio and phase angle errors for loads 120 per cent to 10 per cent of the full load value, and for any burden 2·5 VA to the full rated burden of the current transformer. Sub-standard accuracy current transformers require to be tested to an accuracy of 0·01 per cent in ratio error; and a fraction of a minute in phase angle error; while the commercial classes require only an accuracy of 0·1 per cent in the ratio error and two minutes in phase angle error.

Testing procedure.—The testing procedure, adopted, at the Laboratory, is a modification of the Biffi method for current transformer testing. The principal features of this method are as under—

(1) One standard noninductive shunt is included in the primary circuit of the current transformer under test, of such value, as would give across its potential terminals, a voltage drop of about one volt, on full load.

(2) A second standard non-inductive shunt is included in the secondary circuit of the current transformer, under test, of such value, as would give, across its potential terminals, a voltage drop of about one volt on full load.

(3) A test bridge is formed, with the two standard shunts as two arms and two high resistances of about 1,000 ohms each forming the other two arms. A variable capacitance is connected across one or other of the two 1,000 ohms resistance shunts.

(4) Null point is obtained on the vibration galvano-meter by adjustments made on one of the 1,000 ohms resistances and the variable capacitance.

The modification, that is effected, to the above method of test at the Laboratory, is to replace the standard noninductive shunt on the primary side of the current transformer, under test, by a standard or sub-standard current transformer, with 5 amp secondary and to include one 0·2 ohm noninductive shunt in the secondary side, to give a voltage drop of one volt. This 0·2 ohm

non-inductive shunt takes the place of the primary standard non-inductive shunt in one arm of the bridge-work.

Primary supply to the current transformers.—There are three sources of sine wave supply for current transformer loading. They are:

(1) The voltage alternator of the sine-wave alternator set: 110/220 volts: 50 cycles: 3 phase: one KVA.

(2) The current alternator of the sine-wave alternator set: 30 volts: 50 cycles: 3 phase: 5 KVA.

(3) Alternator of the four machine set: 120/240 volts: 25/50 cycles: 3 phase: 5 KVA.

The current and voltage alternators of the sine-wave alternator set, are run by an 8 h.p. D.C. motor off 120 volt 60 cell battery supply.

The alternator of the 4 machine set is run by the D.C. motor: 16 k.w.: 120/160 volts; off battery supply.

Supply from the voltage alternator of the sine-wave alternator set is used at the Laboratory only for tests on step-up current transformers of the laboratory. For all normal tests on step-down current transformers, the current alternator supply of the sine-wave set or the 240 volts alternator supply of the four machine set is used.

Scope of tests.—The normal testing work of the Laboratory is on Class AL and BL current transformers of the Departmental systems. Other classes are brought by electric supply licensees, firms and institutions. All current transformers that are brought for tests are in general of 5 amp. secondary current and of ratios 100/5 to 5/5.

Permanent arrangements are available at the Laboratory for tests on current transformers ratio 5/5 to 100/5, requiring up to 120 or 150 amps primary supply. For higher ratio current transformers, requiring more than 150 amps, temporary arrangements are made and such arrangements easily give any load up to 1200 amps for C.T. loading.

The current alternator supply is used for loads up to 60 amps, directly, from the machine. For loads above 60 amps and up to 500 amps, the 240 volts alternator supply is used to feed a 240 volts primary: 10/5 volts, 250/500 amps secondary: loading transformer. For loads above 500 amps and up to 1200 amps, two loading transformers are connected up in parallel.

Equipments involved.—Equipments involved in current transformer testing apart from the alternators, and loading transformers, are as follows:—

(1) Starter cubicle of the sine wave set.

(2) Sine wave set control board.

(3) Precision test table.

(4) States table.

(5) Test C.T. table.

(6) Standards room switch board.

(7) Standard multi-range current transformer: Ratio 5/5 to 600/5.

Arrangement of gear and cables.—The general arrangement of the C.T. test gear and layout of supply cables, is shown in Sketches 1 and 2.

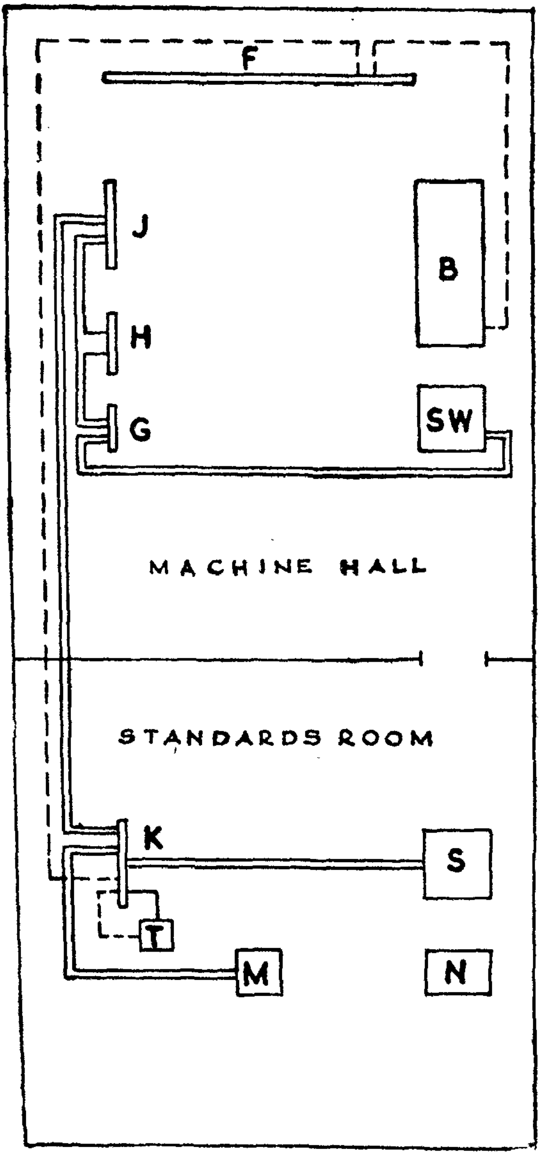

SKETCH 1.—LAYOUT OF CABLES FOR C.T. TEST GEAR; SUPPLY FROM SINE WAVE ALTERNATOR SET.

Reference.

SW = Sine wave set.

G = Sine wave set control panel.

H = R.S.S. test table.

J = States table.

K = Standards room switch panel.

M = Test C.T. Table.

N = Galvanometer table.

S = Standard, C.T.

B = Four Machine set.

F = Four Machine set control panel.

— — 230 V supply leads.

— C.T. supply cables.

Sketch 1 shows the cable layout and gear when sine-wave current alternator supply is taken for loads up to 60 amps.

Sketch 2 shows the cable layout and gear when 4-machine alternator supply is used with loading transformer for loads 60 to 150 amps.

In the case of current alternator supply, the supply cables stretch from the alternator to the standard C.T. and test C.T. table through the sine-wave set control board, precision test table, States table, and the standards room switch board.

In the case of 4-machine alternator supply, the machine voltage is plugged in from the main machine control panel, on to the standards room switch board ; and from there to the loading transformer placed close to the board. The feeder cables from the loading transformer extend from the transformer to the switchboard, from there to the standard C.T., test C.T. table, and the States table.

A general description of each item of testing gear is given below. Cable connections and arrangements of terminals on the different tables are indicated in Sketch 3.

Starter cubicle of the sine-wave set.—The starter cubicle of the sine-wave set contains the following switch and control gear :—

(1) Coarse control rheostat for motor field excitation.

(2) Fine control rheostat for motor field excitation.

(3) Field switch to current alternator.

(4) Field switch to voltage alternator.

Normal 50-cycle speed is 1500 r.p.m. and this speed is maintained with reference to the pedestal tachometer on the machine bed plate and the frequency meter on the precision test table, by adjustments on the field control rheostats.

Sine-wave set control board.—Instrumets and control gear on the sine-wave set control board are given below :—

(1) Field control coarse rheostat of the current alternator.

(2) Field control coarse rheostat of the voltage alternator.

(3) Indicating voltmeters for current alternator and voltage alternator supplies.

A normal voltage of 230 volts is maintained on the voltage alternator and 25 volts on the current alternator.

Precision test table.—The instruments, control gear and switch gear on the precision test table are given below :—

(1) Frequency meter to indicate 50 cycles.

(2) Fine control rheo of current alternator field.

(3) Fine control rheo of voltage alternator field.

(4) One D.P.D.T. switch, giving the freqeuncy meter either the alternator supply of four-machine set or the voltage alternator supply of the sine-wave set.

This table has loading arrangements by low voltage lamps, up to 20 amps. As this load is generally

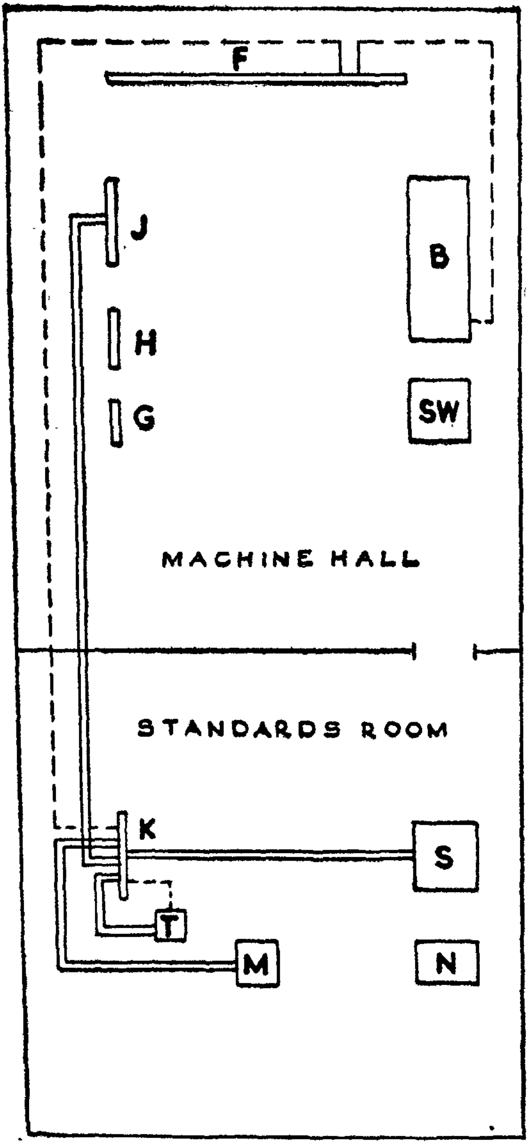

Reference.

B = 240 V: 3 phase alternator of four-machine set; 12 amps.

P = Mains control panel.

K = Standards room switch board.

T = Loading transformer.

J = States table.

M = Test C.T. table.

S = Standards C.T.

N = Galvanometer table.

— — — 230 V supply mains.

— Current cables for C.T. tests.

SKETCH 2.—LAYOUT OF CABLES FOR C.T. TEST GEAR; SUPPLY FROM FOUR-MACHINE ALTERNATOR.

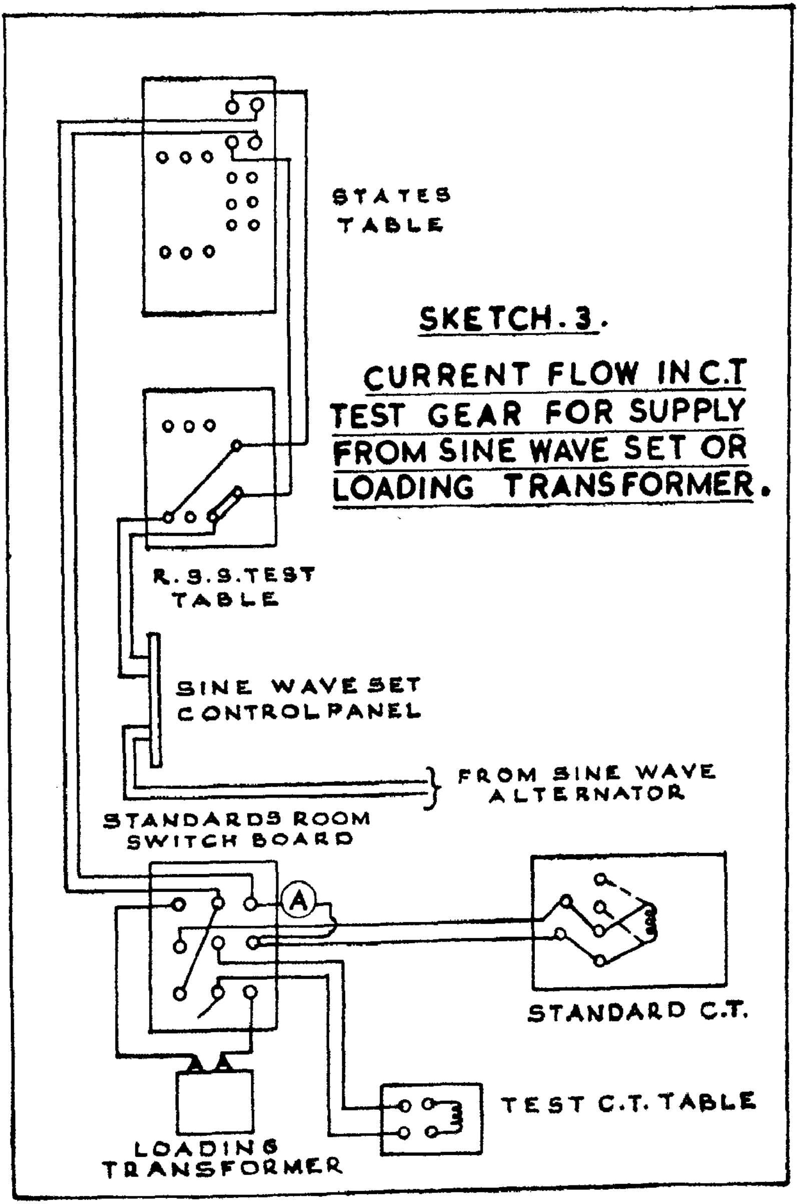
STATES TABLE
SKETCH. 3.
CURRENT FLOW IN C.T TEST GEAR FOR SUPPLY FROM SINE WAVE SET OR LOADING TRANSFORMER.
R. S. S. TEST TABLE
SINE WAVE SET CONTROL PANEL
FROM SINE WAVE ALTERNATOR
STANDARDS ROOM SWITCH BOARD
A
STANDARD C.T.
TEST C.T. TABLE
LOADING TRANSFORMER

not sufficient for testing purposes, the loading arrangement on the states table is used in preference to this.

States table.—This table has three banks of loading arrangements, each 80 amps, 8 volts. One D.P.D.T. switch connects the load banks either in delta for polyphase loading, or all in parallel for single-phase loading. There are besides links on each of the three load arms. In using the current alternator supply for direct loading, the machine voltage is maintained 25 volts, the load banks are put in delta and one arm link is opened out and the machine voltage applied to the gap.

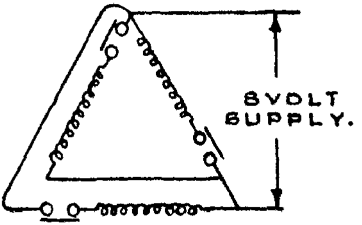

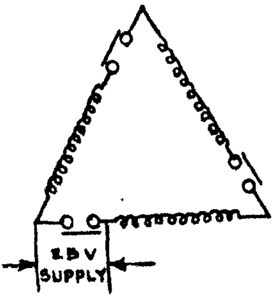

As the three load banks are now in series, there is again only 8 volts drop across each bank. A load of 60 amps can be easily obtained for the tests by this arrangement. In using the loading transformer supply the L.T. voltage of the transformer is 10 volts and this gives a voltage of just 8 volts on the table, allowing for ohmic drops in the feeder cables and C.T. primaries. The three load banks together give easily a load of 150 amps, for the tests.

One current transformer and one ammeter are put on the table to measure load. Loading can be adjusted in steps of ½ amp by using load switches on this table. Smooth variation when using current alternator supply is obtained by adjusting the current alternator field control rheostat on the precision table. Smooth variation, when using loading transformer supply is obtained by connecting up a variable wire wound rheostat across supply.

Test C.T. table.—A terminal board with four terminals is provided on the test C.T. table.

A burden box is placed on this table and the required value is connected to the secondary side of the test C.T.

Standards room switch board.—A terminal board with six terminals and one S.P.D.T. switch is provided on this board. The supply cables to the standard C.T., supply cables to the test C.T. table ; and the feeding-in cables from the loading transformer are connected on to this board.

The S.P.D.T. switch connects the feeder cables either to the current

alternator supply or the loading transformer supply.

The four-machine alternator supply is brought from the main machine panel to the board and supply is switched on to the loading transformer.

An ammeter is connected up to the circuit, on this board to indicate feeder load.

Galvanometer table.—Equipments on this table are as under :—

(1) Two standard non-inductive shunts each 0·2 ohms.

(2) Two resistance boxes each 1000 ohms.

(3) One decade capacitance box.

(4) Galvanometer, galvanometer shunt, lamp and scale.

(5) Tap switch for galvanometer and change-over switch to the capacitance to put the capacitance across one or other of the two 1000 ohms resistances.

One 0·2 ohm non-inductive shunt forms the burden of the standard C.T. and the other a portion of the burden of the test C.T.

Standard C.T.—The standard C.T. is of Arnolds multi-ratio Pattern and has all ratios 5/5 to 600/5. The C.T. has two faces, on which plug and link panels are arranged.

One face, called the low current face, has five plug panels, and by insertion of suitable plugs, thereon C.T. ratios 5/5, 10/5, 15/5, 20/5, 25/5, 30/5, 40/5 and 60/5 are obtained. The other face, called the heavy current face, has four plug panels, and a link panel ; and by insertion of suitable plugs on the panel and arrangement of links, in a suitable manner, C.T. ratios 50/5, 100/5, 150/5, 200/5, 250/5, 300/5, 400/5, and 600/5 are obtained.

Both faces of the C.T. have separate supply terminals and supply has to be given on the particular face of the C.T. that is used for the testing.

Normal testing, therefore, requires supply being given to one or other of the two faces of the C.T.

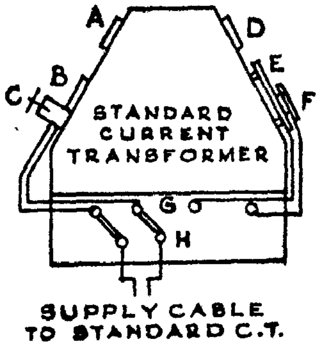

Reference.

A = Row of 4 plug panels on low current face.

B = 5th plug panel.

C = Supply connectors.

D = Row of 4 plug panels on heavy current pace.

E = Link panel.

F = Socket terminals for supply.

G = Top row of terminals on board.

H = Bottom row of terminals on board.

To facilitate easy connection of one face or other of the C.T. a terminal board of 6 terminals is provided on the C.T. arranged in two rows. The bottom row has two terminals and these are connected to the in-coming and outgoing supply cables. The top row has four terminals one pair being connected to the low current face, and the other to the heavy current face. By insertion of links on the board, one or other of the two faces of the C.T. gets connected to supply.

Connections for C.T. testing.—The connections that are to be carried out for tests on current transformers are simple and are as under—

(1) On the precision table, current alternator supply is linked up to C.T. supply cables.

(2) On the states table, the load banks are linked up to the C.T. supply cables, through a measuring C.T. and ammeter. A variable tubular rheostat is connected across supply on this table.

(3) On the test C.T. table, the test C.T. is connected to the supply terminals on board and links arranged on the terminal board. Required burden is chosen on the burden box and connected up to the C.T. secondary.

(4) On the standard C.T. links are arranged on the terminal board to give supply to the particular face of the C.T. that is to be used. Plugs are inserted on the plug panels and links arranged on the link panel as per instruction chart to give the particular ratio that is required.

(5) On the standards room switch board supply cables are linked up as required. An ammeter is included in the circuit for ready reference as a check on the feeder load maintained on the States table.

Adjustments with current alternator supply.—When current alternator supply is used for testing, the frequency meter is given 230 volt supply from the voltage alternator and frequency is maintained by adjustments on the motor field control rheo on the starter cubicle of the sine wave set.

The load banks on the states table are connected in series and the load adjusted nearly to the required value, by closing in sufficient number of load switches. Smooth control of load is obtained by adjustments on the field rheostat of current alternator on precision test table.

Adjustments with 240 volts *alternator supply.*—When four machine alternator supply is used for testing, supply is plugged in to the standards room control panel and switched on to the loading transformer. Supply is maintained 230 volts and switched on to the frequency meter.

The load banks on the States table are connected in parallel. Loads are initially adjusted by closing in sufficient number of load switches on the table. Fine adjustments are obtained on the wire wound rheostat inserted across supply on the table.

Frequency is maintained constant with reference to the frequency meter by adjustments on the alternator field control rheo on the main machine panel.

General.—When tests are carried on, number of assistants are required (1) to maintain constant load on the states table, (2) to adjust excitation rheostat on the precision table and to attend to other operations on the sine wave set control board, (3) to adjust excitation rheostat on the control starter cubicle beside the sine wave set or the alternator excitation on the main machine panel, (4) to maintain constant frequency on the frequency meter and (5) to give proper connections to the standard C.T., proper burden to the test C.T and to check up load ammeter on the switch board, within the standard room.

Instructions of the testing engineer at the Galvanometer table are conveyed to the assisting personnel through intercommunicating telephones.

Conclusion.—For tests on C.Ts. with primary loads above 100 amps temporary arrangements are rigged up with the substandard C.T., test C.T., measuring C.T., all assembled beside the standards room switch board. An additional loading transformer is connected up if required. The secondaries are connected up to the galvanometer table through existing secondary connection leads.

Supply is switched on to the loading transformer or transformers, and tests carried out by adjustments on the galvanometer table as before.

Progress During the Quarter Ending 31st March 1955

Salient Features

The Periyar Hydro-Electric Scheme was inaugurated by the Chief Minister of Madras on 11th February 1955.

One hundred and twenty-six new villages were electrified during the quarter.

Also 233·75 miles of H.T. and 306·96 miles of L.T. lines were constructed and energised during the quarter.

Construction Branch

Pykara Plant Extensions III stage. —Erection of power and outlet pipes with their valves was completed. Masonry work for the up-stream and down-stream wing walls was over. Work on the down-stream protection for left and right flanks was completed. Masonry in main dam and work on earth bund were in progress.

Madurai Thermal Scheme.—Laying 6-inch diameter pipe line for cooling water make up was done for a length of 692 feet.

Madras Plant Extensions.—Turbo Alternator set under 2nd stage extensions No. 1 was commissioned on 12th January 1955

along with the boiler No. 1 of 80,000 lb./hr. capacity; and put into regular service from 24th January 1955. The automatic voltage regulator for generator No. 1 was commissioned on 10th February 1955. Unit transformer No. 1 was commissioned on 27th February 1955. Testing of pipes, laying of mud mat and fixing of reinforcements, etc., for boiler No. 5 were completed during the quarter.

Under the III stage extensions, dismantling of steel and concrete in foundation was in progress.

Periyar Hydro-Electric Scheme.—The inauguration of the scheme was done by the Chief Minister on 11th February 1955.

Pilot camps were formed in the lower and upper camp areas. Construction of temporary and permanent buildings in the lower camps was let on contract and the site handed over to the contractors. Tenders for the construction of quarters at the upper camp were called for.

The irrigation discharge was closed on 10th March 1955 and all arrangements were made to commence improvement work to the irrigation tunnel from that date.

Transmission Lines—(a) *Salem-Namakkal* 110 *K.V. line.*—Tree clearance, check survey and pegging out locations were completed. Earth work excavation concreting tower erection and stringing were in progress.

(b) *Singarapet-Villupuram* 110 *K.V. line.*—Survey was completed. Approval of P.T.C.C. for route was received and excavation for foundation was commenced in Singarapet and Tiruvannamalai areas.

(c) *Singarapet-Vellore* 66 *K.V. line.*—Survey was completed. Tree valuation schedules were prepared and got valued by the Revenue authorities. Line and concrete materials were being collected.

(d) *South Kanara Scheme.*—On the Hulikal-Mangalore 110 KV. line, check survey, jungle clearance, excavation and stub setting, erection of towers, stringing of conductors and earth-wire were over.

On the Udipi-Hiriadka-Karkala 33 KV, lines, check survey, jungle clearance, excavation of pits, erection of poles, stringing of conductors and telephone line, etc., were over. Painting of poles was in progress. On the Udipi-Coondapur 33 KV. line in the Harkur-Udipi reach detailed survey, jungle clearance and pegging out pole location were completed and excavation of pits was progressing. In the Barkur-Coondapur reach, jungle clearance was completed and pegging out pole location, erection of poles were in progress. Civil works on the various substations were in progress.

(e) *Pykara - Coimbatore - Madurai* 110 *KV. line.*—All the works were completed. Work on the buildings and staff quarters at Thudiyalur sub-station continued to progress.

(f) *Coimbatore-Madukarai-Palghat* 66 *KV. line.*—Detailed survey work was completed.

(g) *Villupuram-Neiveli* 110 *KV. line.*—Reconnaisance survey was completed and tentative route plan prepared.

(h) *Sembatti-Theni* 110 *KV. line.*—Approval of route by the P.T.C.C. has been received and orders are being placed for the line materials.

OPERATING SYSTEMS

Hydro Systems

Generation

The station peak load, system peak load and the units generated during quarter were as follows :—

Name of system/station.	*Station peak load in M.W.*	*Units generated in millions.*	*System peak load in M.W.*
Pykara ..	71·7	64·94	59·4
Moyar ..	32·9	26·37	
Mettur ..	40·0	44·93	57·5
Papanasam ..	28·0	28·51	26·3
Madurai Thermal.	11·2	16·91	
Udipi ..	0·232	0·16	..
Karkala ..	0·032	0·02	..

The following services were connected during the quarter :—

System.	*Agricultural.*	*Industrial.*	*Domestic.*
Pykara ..	879	47	2,676
Mettur ..	261	21	1,056
Papanasam ..	129	25	1,745

The storage at Mukurti was satisfactory during January 1955 and was steadily falling thereafter. Owing to depletion, the water position at Papanasam was not satisfactory. The level of Mettur reservoir was falling gradually. The hydro systems were getting maximum relief from Madras System to conserve the water to meet the demand till the onset of south-west monsoon in June 1955.

The following are the more important works attended to during the quarter :—

(1) Improvements to raise the capacity of the Pykara Main Flume Channel to 300 cusecs and special repairs thereon were completed.

(2) In the Mettur Power House, annual overhaul of machine No. 2 was completed and the overhaul of machine No. 4. was in progress.

(3) At Madurai thermal station, the annual overhaul of Boiler No. 4 and inspection by the Inspector of Boilers were over.

Distribution

The following are some of the important works carried out during the quarter.

Pykara Electricity System.—Erection of the 66 K.V. Negamam switching station was completed and the station was commissioned on 24th January 1955.

The extension of 33 KV line from Puliampatti to Shenbagapudur was completed and the line charged at 11 KV on 18th January 1955.

Mettur Electricity System.—The total outturn of the Mettur Workshops during the quarter was Rs. 9·29 lakhs.

The construction of Chidambaram-Neiveli 33 KV line and 33-11 KV Neiveli Sub-station was completed and they were energised on 4th March 1955 and 30th March 1955, respectively.

Papanasam Electricity System.—The 33 KV Srivaikuntam-Sattankulam line was energised at 11 KV on 18th February 1955.

The second line to India Cements, Talayuthu, was completed.

Thermal System

Madras Electricity System.—The Station peak load, system peak load and units generated during the quarter were as follows :—

Name of station.	*Station peak load in M.W.*	*Units generated in millions.*	*System peak load in M.W.*
'A' Station.	22·8	26·306	36·5
'B' Station.	28·0	36·981	
'C' Station ..	2·2	0·175	

One hundred and fifty-two agricultural services, 46 Industrial services and 968 domestic services were connected during the quarter.

D.C. services totalling 322 with a connected load of 386·43 K.W. were changed over to A.C.

Madras System continued to give maximum relief to the Hydro Systems during this quarter.

At the 'A' station, overhaul of boilers 7 and 8 was completed during the quarter. The overhaul of the turbo-alternator No. 4 which was released on 31st January 1955 was completed during the quarter. Turbo-alternators 6 and 7 were almost in continuous service.

At the 'B' station, boilers 2 to 4 and turbo-alternator No. 2 were in satisfactory service during the quarter.

The natural draught cooling tower No. 1 was commissioned on 28th March 1955.

Rural Electrification

About 104 major construction works were under various stages of progress during the quarter.

The number of villages electrified during the quarter in the various systems was as follows :—

Pykara system	48
Mettur system	22
Papanasam system	39
Madras system	17
Total ..	126

A large number of rural extension schemes were in progress. Particulars of new lines constructed and brought into beneficial use during the quarter in the several systems were as under :—

System.	*H.T. (in miles).*	*L.T. (in miles).*
Pykara	66·35	94·85
Mettur	23·32	56·33
Papanasam	120·77	100·52
Madras	23·32	55·26
Total ..	233·75	306·96

Accounts Branch

The Department earned a revenue of Rs. 160·65 lakhs during this quarter and the working expenses amounted to Rs. 65·65 lakhs. The capital expenditure during the quarter amounted to Rs. 348·79 lakhs.

The following voluntary loan contributions towards capital works

were received in the various systems to end of February 1955 :—

System.	*Amount in lakhs.*
Pykara	10·88
Mettur	3·86
Papanasam	2·94
Madras	16·90
Total ..	34·58

Technical Branch

(*a*) *Electrical.*—The following were some of the more important works attended to during the quarter :—

Specification for Neiveli-Villupuram 110 KV line was issued.

Specifications were issued and tenders were received for the supply of A.C.S.R. conductors.

Tenders for the switchgear required for the sub-stations under Erode, Tiruchi III Circuit change-over, Singarapet-Villupuram Extensions, etc., were analysed and orders were being issued.

Detailed estimates were prepared and technical sanction obtained for the scheme for the change-over of the Erode-Tiruchi III Circuit 110 KV.

Tenders for the machinery and plant for the Madras Plant Extensions III Stage were analysed and recommendations have been sent to the Director-General, New Delhi, for placing orders.

Forty-eight purchase orders were issued during the quarter to the value of Rs. 1·61 crores.

Specifications were issued for the Periyar Hydro-Electric Scheme for the supply of generating machinery, indoor switchgear, etc.

The Department participated in the All-India Congress Exhibition, Teynampet. The Departmental stall was visited by the Prime Minister of India and many other distinguished persons all over India.

(*b*) *Civil.*—The following were some of the more important works attended to during the quarter :—

Proposals for the inter-connection of Pykara III and IV penstocks were finalised and quotation for the same was called for from Messrs. Ferrums, Oslo.

Indents were placed for the supply of spare parts for the haulage cranes at Moyar.

Most of the equipments required for the Periyar irrigaton tunnel were ordered.

Specifications and estimates for all camp buildings under the Periyar Hydro-Electric Scheme were finalised.

Tenders received for the Periyar power tunnel and surge shaft were analysed.

Collection and compilation of rainfall and run-off figures of the various basins were continued and the number of rainfall stations rose from 441 to 464 at the end of the quarter.

Construction of measuring weirs across Kodavariar, Punnapuzha, Pegumbuhalla, Naduvattam, Coonoor, Katery, etc., was in various stages of progress.

Installation of rainfall stations in Amaravathi, Thenar and Kodavanar was progressing. Installation of evaporation pan station in Upper Konair basin was progressing.

27 JUN 1956

Technical Press

Rainfall of Madras State with Special Reference to Tamilnad and Rayalaseema.

BY SRI P. R. KRISHNA RAO.

(*Extracted from memoires of the India Meteorological Department, Vol. XXX, Part* 1. *April* 1953.)

Introduction.—The vicissitudes of the rainfall of Madras State have aroused considerable and widespread interest in recent years in view of the occurrence of drought continuously for a few years in parts of the State and the consequent scarcity conditions and hardship to the people requiring relief measures. A study of the North-east monsoon rainfall of Tamilnad was therefore taken up as well as the rainfall of the Madras State as a whole.

Distribution of normal rainfall.—It is seen from the rainfall maps that Malabar-South Kanara has the highest annual rainfall while Rayalaseema has the least rainfall. In Malabar most of the annual rainfall occurs in the south-west monsoon (June to September) while in Tamilnad more rain occurs in the north-east monsoon than in the South-west monsoon. In the south-west monsoon season, the rainiest months are June and July in Malabar, and August and September in Rayalaseema and Coastal Andhradesa. In Tamilnad, the rainiest months are October and November, the interior districts getting more rainfall in October, and the coastal districts more rainfall in November.

An interesting and remarkable feature of the rainfall distribution in the south-west monsoon is the very small amount of rainfall in the southern districts of Tamilnad which are in the "rain shadow" of the Western Ghats, south of the Palghat Gap. It is also noteworthy that the Nellore district, east of the Vellikonda range of hills has less rain than the surrounding areas. Another interesting feature is that in the south-west monsoon the rainfall increases from the West Coast towards the interior with increase of elevation while in the north-east monsoon the rainfall is maximum along the coast and decreases with elevation as we go into the interior.

Rainfall data are available for the period 1875–1951 for the Madras State that, then, included Andhra and Travancore-Cochin State, the latter coming in as part of the sub-division, Malabar; and 1870–1952 for Tamilnad—north-east monsoon.

Although in Tamilnad, the period of 1875–1951 had 8 years of moderate and severe drought during the south-west monsoon and 16 years of moderate and severe drought during the north-east monsoon, there were only two years of moderate and severe drought taking the

year as a whole. It would appear from this, that the south-west and north-east monsoon rains, which together give over 80 per cent of the annual rainfall, are complimentary in that what is lost by one is made up, so to say, by the other. There is therefore indication that good north-east monsoons in Tamilnad are associated with deficient or normal south-west monsoons and that deficient north-east monsoons are associated with excessive or normal south-west monsoons. This relationship requires further detailed statistical examination.

In Malabar the annual rainfall has only a small variation and only one year out of 77 had even moderate deficiency of rainfall.

Chief features of the north-east monsoon.—In the beginning of October the atmospheric pressure over India changes over from the summer type, with lower pressure to the north, to the winter type with lower pressure to the south, which establishes the north-easterly flow of winds. During October to December, a low pressure area exists in the Southern part of the Bay of Bengal. In November and December this becomes well marked over in the south-west part of the Bay of Bengal, off the Coromandel Coast. Occcasional intensification and activity of this seasonal low pressure area or the movement westwards of the low pressure waves from the east, through this low pressure area, draws moist maritime air from the equatorial regions. This equatorial or tropical maritime air, coming as east to south-east winds to the north of the low pressure area, and as north-east winds to the west of the low pressure area, interacts with the comparatively less moist north-east to northerly air coming from over the North Bay of Bengal and causes the north-east monsoon rains over Tamilnad. The zone of interaction is along and near the Coromandel Coast and this produces rainfall over the Tamilnad Coast and the adjoining areas. Sometimes depressions and cylonic storms form in the low pressure area over the South Bay of Bengal or move into it from the Gulf of Siam and the China Seas. Some of these move west or west-north-east and striking the Coromandel Coast cause widespread rain over Tamilnad with heavy falls over the coastal districts. An appreciable part of the north-east monsoon rainfall of Tamilnad, specially that of the coastal districts, is "cyclonic" i.e., is associated with cyclonic storms or depressions.

Not all the depressions and cyclones, in the South Bay of Bengal in the north-east monsoon season, move towards the Coromandel Coast. Some of them move north-west or north-north-west and strike the East Coast of the peninsula in the Nellore-Visakhapatnam section, while a few move north and north-east towards the Bengal and Burma coasts. In October, cyclonic storms and depressions generally cross the coast north of Madras, while in November and December they generally cross the coast south of Madras. Although on an average, one cyclonic storm or depression per year crosses the coast south of Madras, there are a number of years when no cyclonic storm or depression had crossed this coast, while there are other years, when even four have

done so. It is an interesting fact that these cyclonic storms and depressions generally strike the coast near deltaic regions, the chief of these being the Krishna, Godavari and Cauvery deltaic regions. In the 62 years 1891–1952, 38 depressions and cyclonic storms have struck the Tamilnad Coast between Madras and Nagapattinam and 32 have struck the coast between Madras and Kakinada.

The map of the distribution of normal rainfall in the north-east monsoon period shows that the lines of equal rainfall run parallel to the coast and that the rainfall over Tamilnad decreases from the coast towards the interior.

There is more rainfall in October than in November or December in the interior districts, while in the coastal districts there is more rainfall in November than in October or December.

There is a steep fall in the normal rainfall amount as we go from the coast into the interior.

The steep gradient of rainfall with the maximum rainfall in the coastal region decreasing rapidly towards the interior with increase of elevation is contrary to the general rule that rainfall increases with elevation. There are two main reasons for this rather unusual feature which is known to occur in some other parts of the world also. Firstly, the moist and unstable north-east monsoon air when it blows as an onshore wind gets a lift as it strikes the coast and this lift is sufficient to precipitate the major part of the moisture as rain along the coast, consequently with less rain in the interior where only the partially moisture-depleted air is received. Secondly, the rain associated with depressions and cyclonic storms, which strike the coast and weaken considerably immediately afterwards, is heavy in and near the coastal areas and very much less in the interior districts. If there had been a high range of hills fairly near and parallel to the Coromandel Coast as we have near the West Coast in the same latitudes, the north-east monsoon air striking the coast and hills nearby would have had general lift and more rain would probably have occutred over and near the hills in the interior than along the coast. The Eastern Ghats are rather too low and too far away from the Tamilnad Coast to affect the distribution of the north-east monsoon rainfall appreciably.

The north-east monsoon rainfall normally commences over Tamilnad about the 10th of October and is over by about the 25th of December covering a period of about 75 days. It does not rain every day during this period of 75 days. Normally there are about 25 to 30 rainy days during this period in the coastal districts and 15 to 20 rainy days in the interior districts. This is on the basis that a rainy day is a day with 10 cents or more of rain. The rainfall occurs in spells of 2 to 4 days.

Abnormalities.—Rainfall is, in general, more variable in the coastal districts, which have higher rainfall, than in the interior districts with less rainfall. Rainfall is most variable in Chingleput district and least variable in Madurai and Nilgiris districts. The mean deviation of rainfall for Tamilnad is 26 per cent. If 20 per cent mean deviation is considered as the limit for dependable

rainfall, it is seen that the north-east monsoon rainfall is not dependable in Tamilnad as a whole or in any district of Tamilnad. It is less dependable in the coastal districts than in the interior districts.

The districts most liable to droughts are Chingleput and South Arcot. Next come Tanjore, Tirunelveli and North Arcot which have the same liability of drought. The next group consists of Salem, Tiruchirappalli and Coimbatore districts. Ramanathapuram and Nilgiris form the next group with somewhat less liability to drought. Madurai is the district least liable to droughts.

A thorough statistical examination of the north-east monsoon rainfall of Tamilnad shows that there is no cycle or periodicity in the occurrence of droughts or floods. There is also no indication of a gradual change in the season's rainfall.

Rainfall in relation to cyclonic Storms and Depressions.—With only a few exceptions, it is found that if no depression or cyclonic storm strikes the Coromandel Coast south of Madras, the north-east monsoon rainfall is deficient. The uncertainty or unreliability of the north-east monsoon rainfall seems to be a reflection of the uncertainty of depressions and cyclones occurring in the South Bay of Bengal and even if they occur, in their moving towards and striking the Coromandel Coast, south of Madras.

When depressions and cyclonic storms occur in the South Bay of Bengal but move in a direction between north-west to north-east, away from the Coromandel Coast, rainfall occurs over the sea area or is diverted to other land areas than Tamilnad.

In October 1950, a cyclone which occurred in the South-west Bay of Bengal moved rapidly northwards and did not cause any rain over Tamilnad although it caused heavy rain over Nellore and the neighbourhood. In December 1951, a severe cyclone in the South Bay of Bengal moved rapidly north and north-east and did not give any appreciable rain over Tamilnad.

Forest and Rainfall.—There has been a suggestion that the deficiency of North-east monsoon rainfall in Tamilnad in the last five years is due to deforestation. For want of reliable data of area under forest over a long period of years, it is not possible to correlate the North-east monsoon rainfall with area under forests. But even in the hilly Nilgiris district which was undoubtedly covered by more forests 50 to 80 years ago than now, north-east monsoon rainfall was very deficient in the years 1870, 1876, 1878, 1886, 1897, 1899 in the last 30 years of the last century. Similarly there have been many years in the last century when the South-west monsoon rainfall in the Nilgiris was deficient. The effect of forests on rainfall has been estimated not to exceed 3 per cent at the most by well-known scientists in other countries. There appears to be no doubt that the effect of forests on rainfall, if any, is very small and that moderate to large deficiencies of rainfall such as have occurred in recent years or in the past can only be due to abnormalities in the larger atmospheric processes, the causes of which remain to be investigated.

Concluding remarks.—In Tamilnad, the north-east monsoon rainfall is more variable in the coastal districts than in the interior districts because an appreciable percentage of coastal rainfall is 'cyclonic'.

The area least liable to drought is Malabar where the rainfall is least variable specially in the South-west monsoon.

With only a few exceptions, the North-east monsoon rainfall of Tamilnad, specially of the coastal districts, is deficient when no depression or cyclone from South Bay of Bengal moves near to and crosses the South Coromandel Coast.

Although the five-year period 1947–51 has been the worst consecutive five-year period for the north-east monsoon rainfall of Tamilnad with a mean deficiency of 31 per cent, there have been two other five-year periods, viz., 1872-76, 1875–79 when the mean deficiency was as much as 25 per cent.

There is an indication that good North-east monsoons in Tamilnad, are associated with defieient or normal South-west monsoons in the same year and that deficient north-east monsoons are associated with excessive or normal south-west monsoons.

The deficiency of North-east monsoon rainfall in Tamilnad in the last five years does not appear to be connected with de-forestation. Forests are known to have only a very small effect, if any, on rainfall.

There is no periodicity in the occurrence of droughts and floods in the North-east monsoon rainfall of Tamilnad. There is also no indication of secular change.

Transformers with Class H Insulation.

Bruntford Transformers, Limited, of Kidbrooke Park Road, Kidbrooke, London, S.E. 3, now offer ventilated and nitrogenfilled sealed transformers constructed with Class H insulation. This material consists of mica, asbestos, fibreglass and similar inorganic materials, in built-up form, with binding cement composed of silicone compounds or materials with equivalent properties. By reason of the substitution of Class H insulation, in place of Class A and Class B insulation, which incorporates organic materials, higher operating temperatures are possible, from which it follows that physical dimensions can be reduced and the transformers can withstand overloads, permanent or temporary, without damage and to an extent that would practically destroy earlier types. Moreover, a humid ambient atmosphere ceases to cause any difficulties; corona is resisted, and the smooth glaze imparted to coil structures by the silicone varnish lessens the possibilities of the accumulation of dirt and other contaminants.

These new-type transformers are available for voltages up to 15 KV and capacities up to 3,000 KVA in the ventilated form and 2,000 KVA in the nitrogen filled sealed forms. Neither employ oil of any kind, and fire and explosion hazards are eliminated. The sealed types are obviously well suited to applications where flooding may be experienced:

in normal sites, they become the equivalent of the ventilated type in the event of nitrogen leakage.

Apart from a reduction in the weight of core and coils by some 15 per cent, in comparison with transformers using Class B insulation, and the foregoing advantages, the new type has a greater inherent stability and therefore almost certainly a longer life in the normal conditions of operation. This is confirmed by experience already achieved with motors having silicone insulation.

"*Power and Works Engineering*"—*March*, 1955.

Revised Bulk Supply Tariff of B.E.A.

The British Electricity Authority has given notice of a revised tariff for the supply of electricity to the twelve Area Boards in England and Wales for the year ending on 31st March 1956. As hitherto, the tariff incorporates a fixed charge per kilowatt of maximum demand and a running charge per KWH consumed. It applies to all Area Boards on a uniform basis, subject only to a regional fuel cost adjustment. Both the fixed kilowatt charge and the running charge remain the same as in the present tariff which came into force on 1st April 1954, but the fuel price adjustment figure, which in that tariff had been reduced from 0·0007 to 0·00065d per penny variation in the cost per ton of fuel in the respective areas, has been further reduced to 0·0006d.

A new feature in the tariff is a provision for adjusting the maximum demand to which the fixed charge applies, if the sum of the demands on the Central Authority varies by more than one per cent from the estimate of total demands on which the charge in the tariff has been based. In such event, the chargeable *maximum* demand *for* each Area Board will be determined by adjusting their actual demand inversely as the sum of the actual demands varies from the estimated total demand. This provision will ensure that during the year of account the fixed KW charges in aggregate will correspond approximately with the Authority's fixed costs of supply during the year, regardless of any variations between the estimated and actual total demands due, for example, to extreme weather conditions, and will minimize the effect of such variations upon Area Board trading results.

"*Electrical Review*—" February 1955.

Electrical Hazard.

Electricity as a source of power is, in some way less hazardous than steam or other prime mover, but failure to take, suitable precautions in its use creates conditions which are *certain* to result in injury or fatality, or in damage to property.

There are certain hazards in the installation, maintenance, and use of electric wiring and equipment. Control of most of these hazards is *neither difficult nor* expensive, but ignoring or neglecting them may lead to serious accidents.

Investigation of lower voltage electrical accidents shows that their causes often can be traced to failure to understand the hazards of low voltage circuits.

High voltage alternating current of commercial frequency (60 cycles) causes violent muscular contraction often so severe that the victim is thrown clear of the circuit.

Although low voltage also results in muscular contraction, the effect is not so violent. The fact, however, that low voltage often prevents the victim from freeing himself from the circuit makes exposure to it dangerous.

Current flow is the factor which causes injury in electric shock. Experimental and field data from authoritative sources indicate that, in general an alternating current of 1–10 amps at commercial frequency may be fatal if it passes through the vital organs. Similarly it is estimated that a current of 0·02 amperes is the limit at which an individual can still release himself from an object held by the hand. Such current flow may readily be obtained on contact with low voltage sources of the ordinary lighting or power circuit.

Effect of shock.—Death or injury may result from the following effects of current on the body.

1. Contraction of the chest muscles which may interfere with breathing to such an extent that death will result from asphyxiation when the exposure is prolonged.

2. Temporary paralysis of the nerve centre which may result in failure of respiration, a condition which often continues until long after the victim is freed from the circuit.

3. Interference with normal rhythm of the heart, causing ventricular fibrillation. In this condition the fibres of the heart muscles, instead of contracting in a co-ordinated manner contract separately and at different times. Blood circulation ceases and death ensues, since apparently the heart connot spontaneously recover from this condition. It has been estimated that 0·1 ampere is sufficient to cause ventricular fibrillation.

4. Suspension of heart action by muscular contraction (on contact with heavy current). In this case the heart may resume its normal rhythm when the victim is freed from the circuit.

5. Hæmorrhages and destruction of tissues, nerves and muscles from heat due to heavy current.

In general, the longer the current flows, through the body the more serious may be the result. On high voltage sources considerable current is likely to flow, and in general only very short exposure can be tolerated if the victim is to be revived.

Injuries from electric shock are less severe when the current does not pass through near nerve centres and vital organs. In the majority of electrical accidents in industry the current flows from hands to feet. Since such a path involves both the heart and lungs, results are likely to be serious.

Another type of injury is burn from electric flashes. Such burns are usually deep and slow to heal and may involve large areas of the body. Even persons at a relatively good distance from the are may receive eye burns.

Where large power is available, flashes of explosive violence may result. Such intense arcing is caused by short circuits between

bus bars or cables carrying heavy current, failure of knife switches or their being opened, while they are carrying a heavy load, and pulling of fuses in energised circuits.

Statistics indicate that only a small percentage of those who recover from electric shock show permanent disability. In many cases, the victim may be saved by prompt application of artificial respiration, since a common result in electrical accidents is failure of that part of the nervous system which controls breathing.

It is, therefore, essential that persons engaged in electrical work may be instructed in the Schafear pressure method of resuscitation. It should immediately be applied to a victim of electric shock and should be continued until he revives, until death is diagnosed by a physican, or until *rigor mortis* set in.

"The Association of Electrical undertakings, Bombay Province"

Circular letter—May 1955.

Social and Personal

1. On return from leave, Sri G. Sundaram assumed charge as part-time Consulting Engineer to Government (Electrical) on 17th April 1955, forenoon.

2. On expiry of leave, Sri K. M. Kuruvilla assumed charge as Chief Electrical Inspector to Government on 14th May 1955, afternoon.

3. Sri L. Ekambaram, Superintending Engineer, Papanasam Electricity System has joind duty as Superintending Engineer (Generation), Madras Electricity System on 16th June 1955, afternoon vice Sri P. V. A, Narayanamurthy granted leave for 31 days.

4. On expiry of leave, Sri P. V. A. Narayanamurthy has been posted as Superintending Engineer (Generation), Hydro-Areas, Erode, vice Sri V. K. Govinda Menon transferred to Papanasam System.

5. The following Assistant Engineers (Electrical) have been promoted as Divisional Electrical Engineers :—

Sri A. A. Thomas.
Sri V. Visvanathan.

6. The following Divisional Electrical Engineers have been reverted as Assistant Engineers (Electrical).

Sri A. A. Thomas
Sri A. D. Moreas.

Appreciation.

On the occasion of Sri K. V. Karantha, Chief Electrical Inspector to Government retiring from service on 23rd July 1955, forenoou the Chief Engineer for Electricity wishes to place on record his appreciation of the long, able and devoted service rendered by Sri K. V. Karantha, to the Department. The good wishes of the Department go to him for his health and happiness in his retirement.